Trolli

INTERNATIONAL PATENT

PUSHCHAIR for KIDS and ADULTS

CE

Inglese cod. 22753 30-09-10

design and quality
MADE IN ITALY since 1980

ORMESA®

functions

The quality of Trolli is its aluminium frame that folds up just like an umbrella.
It was designed to reduce its encumbrance once it is folded to be carried on a plane, on the boot, in the lifts, in the city center easily and without effort.

When IT IS FOLDED, it can be raised and kept with one hand and it doesen't open. Otherwise it can be pushed or pulled just like a trolley, because it moves on its back wheels.
When IT IS OPENED its posture is comfortable and it holds its User well. The footrests can be tipped up and they can be overturned sideways to that they do not stop the approach, once you have to go near to a car, to the water-closet, to a pavement or when you have to go into the narrowest lifts.

technical features

- **Foldable aluminium frame**, painted with non toxic epoxy varnishes
- **Ergonomic, comfortable seat**. Double cross-bracing framework
- Seat and backrest covered with **breathable upholstery** made of technological fabric, removable for washing
- **Flip up** and **swing away footplates**, adjustable in height
- **Puncture proof front wheels**, pivoting 17 cm
- **Puncture proof back wheels**, 25 cm with independent brakes. **Alternative rear wheels**: 25 cm or (available only for Trolli for adults) 30 cm, with independent drum brakes

accessories for adults

- **Backrest extension**
- **Headrest**

Trolli for adults

3 sizes (width seat): 40, 43, 46

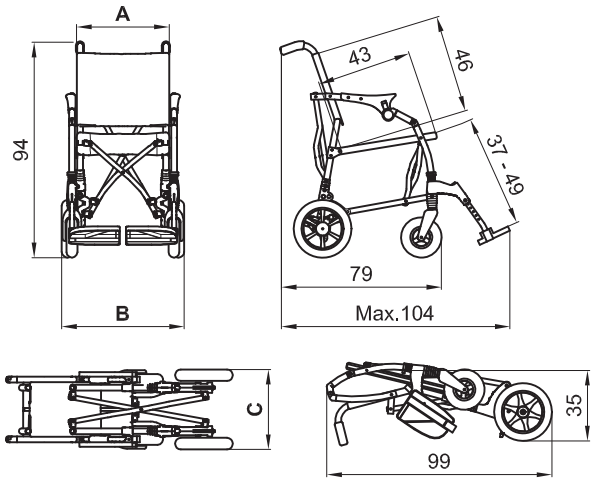

TROLLI	A (cm)	B (cm)	C (cm)	Weight of the aid (Kg)	Maximum load (Kg)
Trolli 40 for adults	40	54	35	11.5	110
Trolli 43 for adults	43	57	37	11.9	110
Trolli 46 for adults	46	60	41	12.2	110

Trollino for kids

3 sizes in 1 only frame!

size 1, with reducer
size 2, with shortened backrest and seat
size 3, with lengthened backrest and seat

- reclinable backrest with jerk on 3 positions

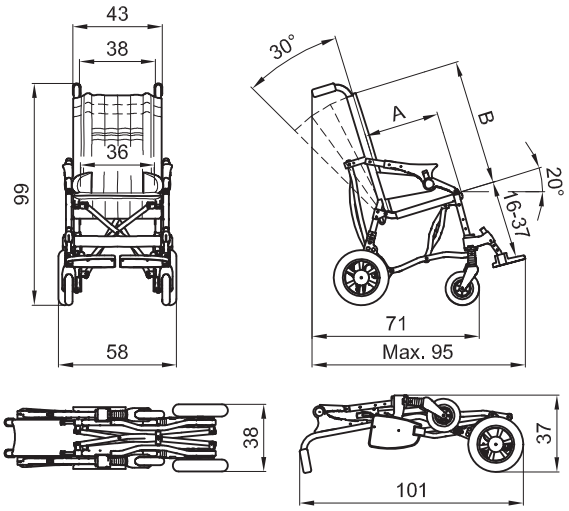

TROLLINO	seat depth A		backrest height B
Size 1	with reducer	cm 25	cm 55
Size 2	with shortened backrest and seat	cm 30	cm 60
Size 3	with lengthened backrest and seat	cm 35	cm 65

WEIGHT OF THE AID Kg 11,5 MAXIMUM LOAD Kg 50

La riproduzione anche parziale è vietata. Il fabbricante si riserva il diritto di apportare qualsiasi modifica senza preavviso

ORMESA S.r.l. - Via A. Da Sangallo, 1 - PACIANA
06034 FOLIGNO (PG) ITALY - TEL. +39 0742 22927 (r.a.) FAX +39 0742 22637
info@ormesa.com - www.ormesa.com

SINCE 1980

COMPANY WITH QUALITY MANAGEMENT SYSTEM CERTIFIED BY DNV
= ISO 9001:2008 =