ORMESA® s.r.l.
Tel. +39 0742 22927 Fax +39 0742 22637 www.ormesa.com info@ormesa.com

CERTIFIED QUALITY MANAGEMENT SYSTEM ISO 9001:2008 SINCERT DNV

ORDER FORM
MINI STANDY
standing frame

DISTRIBUTOR/AGENT:	DATE OF ORDER:
	DATE OF DELIVERY:
	NAME OF THE ADDRESSEE/USER:

Tested by TÜV Berlin
FDA registered - USA
CE marked

FUNCTIONS

- **Frame** with fixed elements painted with non-toxic powder paint and chromed adjustable elements
- **Pelvic and thoracic straps** made of polyester fabric with velcro belts for the adjustment in circumference
- Removable **work table,** made of plastic-laminated wood, adjustable in height and depth
- **Knee pads,** adjustable in height, width and backward-forwards
- **Heel rests,** adjustable in width and depth
- Ergonomic **hand wheels**, for the adjustment of elements with pointed fixing screws
- Slightly flexible wooden **base**. Thanks to the flexibility, the child is stimulated to assume and maintain an upright position by working all his/her muscles and reducing a hypotonic attitude.
- Solid, 75 mm **wheels**, rear with brakes

Please check off the interested products: ☒

MEASURES

❑ **MINI STANDY-2 small**

❑ **MINI STANDY-3 medium**

Thoracic strap circumference:
Size 2: 60 cm
Size 3: 70 cm

Attention!
Read carefully the user and maintenance manual

Frame colour: **orange**
Base colour: **blue**

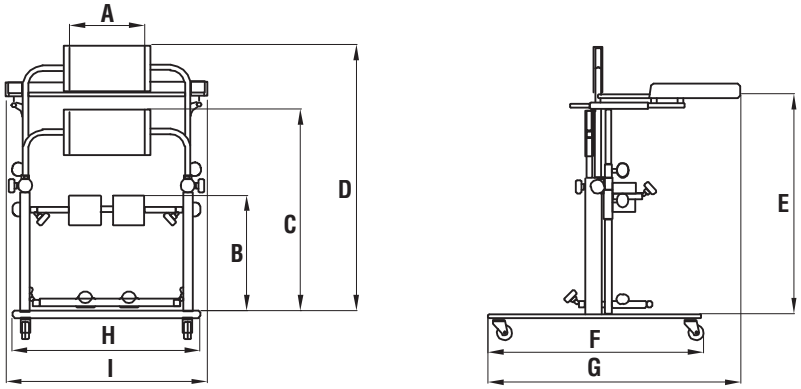

SIZE	MAX LOAD CAP	WEIGHT	A	B	C	D	E	F	G	H	I
2	Kg. 45	Kg. 19,9	cm 24	cm 17-36	cm 55-68	cm 70-90	cm 56-78	cm 65	cm 82	cm 60	cm 70
3	Kg. 55	Kg. 23,9	cm 30	cm 20-47	cm 65-85	cm 85-110	cm 70-100	cm 75	cm 88	cm 65	cm 70

Notes:

INGLESE - Cod. 22585 - 14/09/2011

Congratulations for choosing ORMESA!